# Submittal Data Information
## FE Series Pumps

301-801

EFFECTIVE: MAY 1, 1993 SUPERSEDES: NEW **1160 RPM** MODEL 2513

JOB _____

ENGINEER _____

CONTRACTOR _____ REP. _____

| ITEM NO. | MODEL NO. | IMPELLER DIA. | G.P.M. | HEAD/FT. | H.P. | ELEC. CHARS. |
|---|---|---|---|---|---|---|
| | | | | | | |

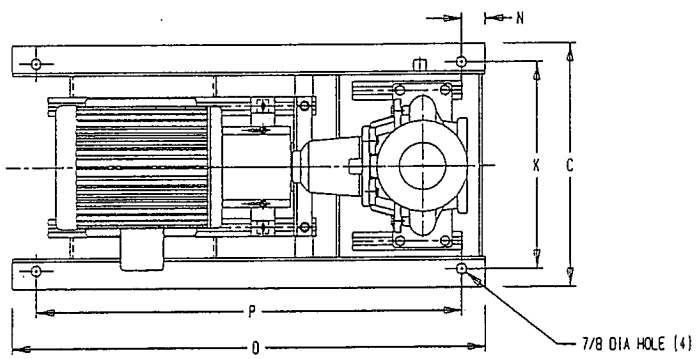


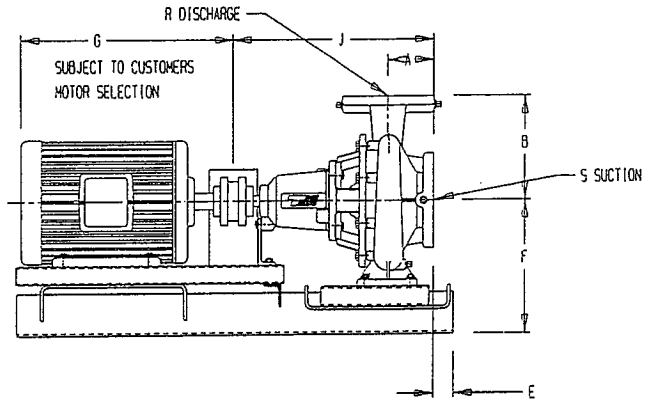


50 Cycle Performance Curves attached when applicable.

| Model No. | HP 1160 RPM | HP 1760 RPM | HP 3500 RPM | Motor Frame | A | B | C | D | E | F | J | K | N | P | R | S |
|---|---|---|---|---|---|---|---|---|---|---|---|---|---|---|---|---|
| 2513 | 2 | | | 184T | 4-23/32 | 10-27/32 | 22 | 49 | 1-1/2 | 12-3/8 | 22-5/16 | 20 | 2 | 45 | 2-1/2 | 3 |
| | 3 | 7-1/2 | | 213T | | | | | | | | | | | | |
| | 5 | 10 | | 215T | | | | | | | | | | | | |
| | 7-1/2 | 15 | | 254T | | | | | | | | | | | | |
| | | 20 | | 256T | | | | | | | | | | | | |
| | | 25 | | 284T | | | | | | | | | | | | |

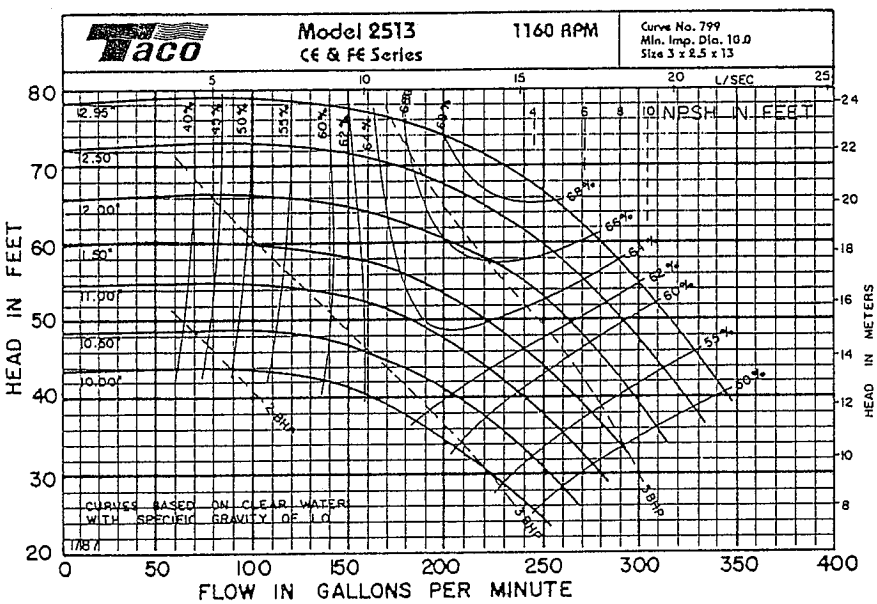


| Item | BRONZE FITTED | | ALL IRON | |
|---|---|---|---|---|
| | Std. Pump Constr. | Optional | Standard | Optional |
| Casing | Cast Iron ASTM A48 Cl. 35 | | Cast Iron ASTM A48 Cl. 35 | |
| Impeller | Bronze ASTM B30-4A | | Cast Iron ASTM A48 Cl. 35 | |
| Wear Ring | Bronze ASTM B30-4A | | Bronze ASTM B30-4A | |
| Shaft | Carbon Steel AISI 1045 | St. Steel AISI 416 | Carbon Steel AISI 1045 | St. Steel AISI 416 |
| Shaft Sleeve | Bronze SAE 660 | St. Steel AISI 416 | St. Steel AISI 416 | |
| Mech. Seal | Ceramic | Tungsten Carbide | Ceramic | Tungsten Carbide |
| Seal Flush Line | | Copper | | Copper |

| OPERATING SPECIFICATIONS | | |
|---|---|---|
| | Standard | Optional |
| Pressure | 175 PSIG* | |
| Temperature: Mechanical Seal | 250F | 300F |

Motors: All NEMA Standard (T or TS)

* In accordance with ANSI Standard B16.1 Class 125

| ADDITIONAL OPTIONS | |
|---|---|
| Filters | Cuno 5 Micron |
| Separators | Kynar Cyclone Separator |
| Couplings | Spacer Type |

WEIGHT _____ PUMP/MOTOR

COMMENTS: _____


TACO, INC., 1160 Cranston Street, Cranston, RI 02920 (401) 942-8000 FAX: (401) 942-2360.
TACO (Canada), Ltd., 1310 Almco Blvd., Mississauga, Ontario L4W1B2. Telephone: 416/625-2160. FAX: 416/625-8616.



Printed In USA
Copyright 1993
TACO, INC.

# Submittal Data Information
## FE Series Pumps

301-802

EFFECTIVE: MAY 1, 1993 SUPERSEDES: NEW **1160 RPM** MODEL 3010

JOB _____

ENGINEER _____

CONTRACTOR _____ REP. _____

| ITEM NO. | MODEL NO. | IMPELLER DIA. | G.P.M. | HEAD/FT. | H.P. | ELEC. CHARS. |
|---|---|---|---|---|---|---|
| | | | | | | |

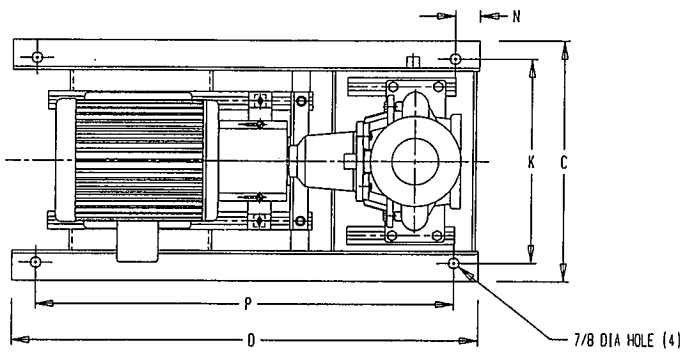


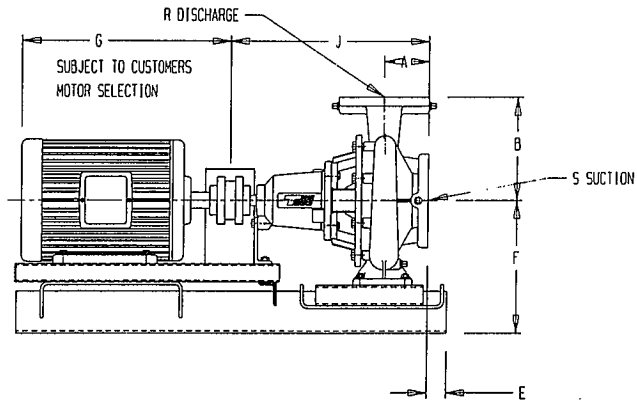


50 Cycle Performance Curves attached when applicable.

| Model No. | HP 1160 RPM | HP 1760 RPM | HP 3500 RPM | Motor Frame | A | B | C | D | E | F | J | K | N | P | R | S |
|---|---|---|---|---|---|---|---|---|---|---|---|---|---|---|---|---|
| 3010 | 2 | | | 184T | 4-23/32 | 10-27/32 | 22 | 46 | 1-1/2 | 11-3/8 | 21-5/16 | 20 | 2 | 42 | 3 | 4 |
| | 3 | 7-1/2 | | 213T | | | | | | | | | | | | |
| | 5 | 10 | | 215T | | | | | | | | | | | | |
| | 7-1/2 | 15 | | 254T | | | | | | | | | | | | |
| | | 20 | | 256T | | | | | | | | | | | | |
| | | 25 | | 284T | | | | | | | | | | | | |

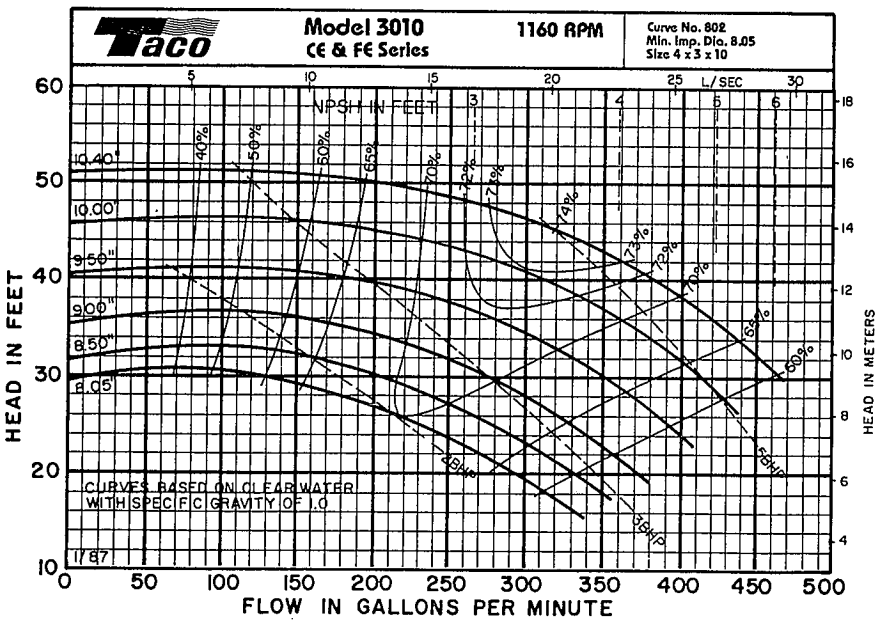


WEIGHT_____PUMP/MOTOR

| Item | BRONZE FITTED | | ALL IRON | |
|---|---|---|---|---|
| | Std. Pump Constr. | Optional | Standard | Optional |
| Casing | Cast Iron ASTM A48 Cl. 35 | | Cast Iron ASTM A48 Cl. 35 | |
| Impeller | Bronze ASTM B30-4A | | Cast Iron ASTM A48 Cl. 35 | |
| Wear Ring | Bronze ASTM B30-4A | | Bronze ASTM B30-4A | |
| Shaft | Carbon Steel AISI 1045 | St. Steel AISI 416 | Carbon Steel AISI 1045 | St. Steel AISI 416 |
| Shaft Sleeve | Bronze SAE 660 | St. Steel AISI 416 | St. Steel AISI 416 | |
| Mech. Seal | Ceramic | Tungsten Carbide | Ceramic | Tungsten Carbide |
| Seal Flush Line | | Copper | | Copper |

| OPERATING SPECIFICATIONS | | |
|---|---|---|
| | Standard | Optional |
| Pressure | 175 PSIG* | |
| Temperature: Mechanical Seal | 250F | 300F |

Motors: All NEMA Standard (T or TS)

* In accordance with ANSI Standard B16.1 Class 125

| ADDITIONAL OPTIONS | |
|---|---|
| Filters | Cuno 5 Micron |
| Separators | Kynar Cyclone Separator |
| Couplings | Spacer Type |

COMMENTS: _____

**TACO, INC.**, 1160 Cranston Street, Cranston, RI 02920 (401) 942-8000 FAX: (401) 942-2360.
**TACO (Canada), Ltd.**, 1310 Almco Blvd., Mississauga, Ontario L4W1B2. Telephone: 416/625-2160. FAX: 416/625-8616.

Printed in USA
Copyright 1993
TACO, INC.

# Submittal Data Information
## FE Series Pumps

301-804

EFFECTIVE: MAY 1, 1993 SUPERSEDES: NEW **1160 RPM** MODEL 4010

JOB _____

ENGINEER _____

CONTRACTOR _____ REP. _____

| ITEM NO. | MODEL NO. | IMPELLER DIA. | G.P.M. | HEAD/FT. | H.P. | ELEC. CHARS. |
|---|---|---|---|---|---|---|
| | | | | | | |

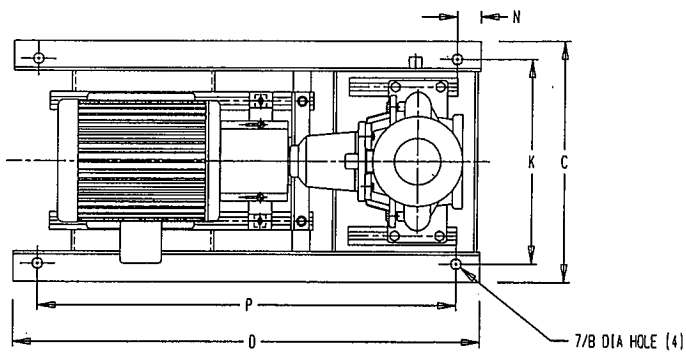


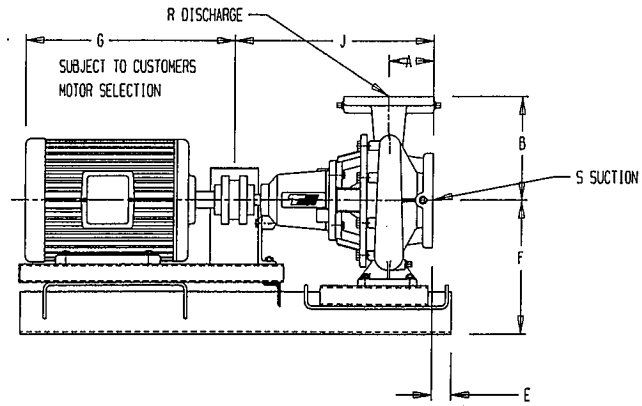


50 Cycle Performance Curves attached when applicable.

| Model No. | HP 1160 RPM | HP 1760 RPM | HP 3500 RPM | Motor Frame | A | B | C | D | E | F | J | K | N | P | R | S |
|---|---|---|---|---|---|---|---|---|---|---|---|---|---|---|---|---|
| 4010 | 3 | | | 213T | 5-5/16 | 10-27/32 | 22 | 53 | 1-1/2 | 12-3/8 | 23-1/16 | 20 | 2 | 49 | 4 | 5 |
| | 5 | 10 | | 215T | | | | | | | | | | | | |
| | 7-1/2 | 15 | | 254T | | | | | | | | | | | | |
| | 10 | 20 | | 256T | | | | | | | | | | | | |
| | | 25 | | 284T | | | | | | | | | | | | |
| | | 30 | | 286T | | | | | | | | | | | | |

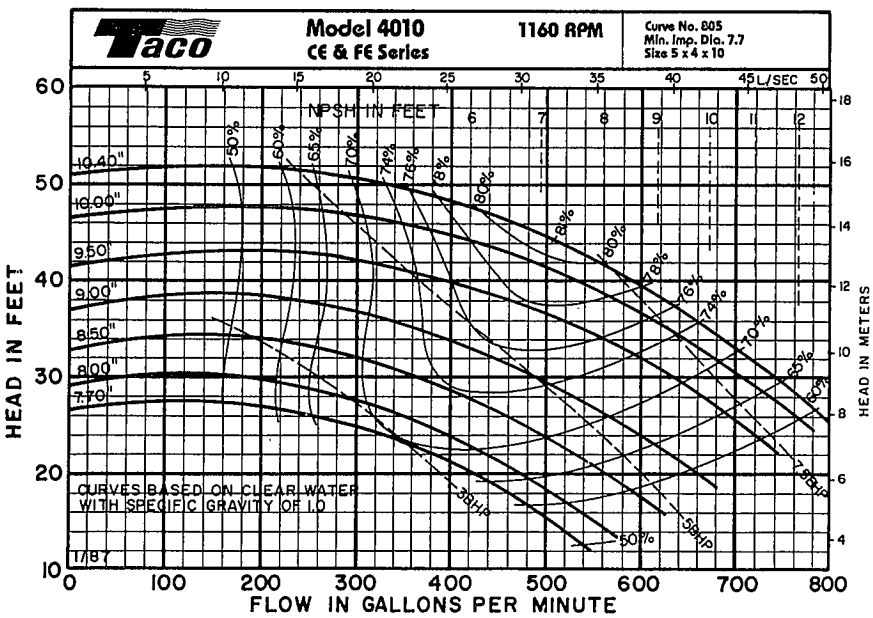


| Item | BRONZE FITTED | | ALL IRON | |
|---|---|---|---|---|
| | Std. Pump Constr. | Optional | Standard | Optional |
| Casing | Cast Iron ASTM A48 Cl. 35 | | Cast Iron ASTM A48 Cl. 35 | |
| Impeller | Bronze ASTM B30-4A | | Cast Iron ASTM A48 Cl. 35 | |
| Wear Ring | Bronze ASTM B30-4A | | Bronze ASTM B30-4A | |
| Shaft | Carbon Steel AISI 1045 | St. Steel AISI 416 | Carbon Steel AISI 1045 | St. Steel AISI 416 |
| Shaft Sleeve | Bronze SAE 660 | St. Steel AISI 416 | St. Steel AISI 416 | |
| Mech. Seal | Ceramic | Tungsten Carbide | Ceramic | Tungsten Carbide |
| Seal Flush Line | | Copper | | Copper |

| OPERATING SPECIFICATIONS | | |
|---|---|---|
| | Standard | Optional |
| Pressure | 175 PSIG* | |
| Temperature: Mechanical Seal | 250F | 300F |

Motors: All NEMA Standard (T or TS)

* In accordance with ANSI Standard B16.1 Class 125

| ADDITIONAL OPTIONS | |
|---|---|
| Filters | Cuno 5 Micron |
| Separators | Kynar Cyclone Separator |
| Couplings | Spacer Type |

WEIGHT_____ PUMP/MOTOR

COMMENTS: _____


**TACO, INC.,** 1160 Cranston Street, Cranston, RI 02920 (401) 942-8000 FAX: (401) 942-2360.
**TACO (Canada), Ltd.,** 1310 Almco Blvd., Mississauga, Ontario L4W1B2. Telephone: 416/625-2160. FAX: 416/625-8616.



Printed in USA
Copyright 1993
TACO, INC.

# Submittal Data Information
## FE Series Pumps

301-805

EFFECTIVE: MAY 1, 1993 SUPERSEDES: NEW **1160 RPM** MODEL 4013

JOB _____

ENGINEER _____

CONTRACTOR _____ REP. _____

| ITEM NO. | MODEL NO. | IMPELLER DIA. | G.P.M. | HEAD/FT. | H.P. | ELEC. CHARS. |
|---|---|---|---|---|---|---|
| | | | | | | |

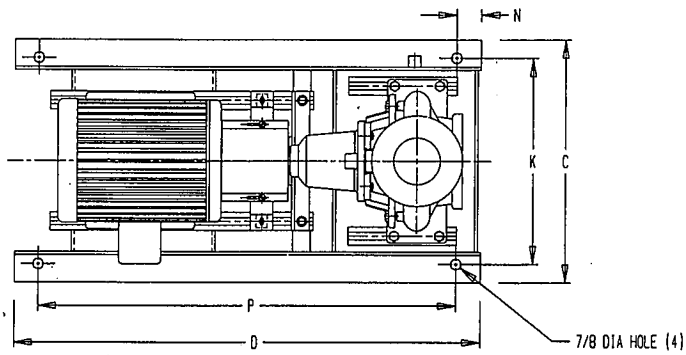


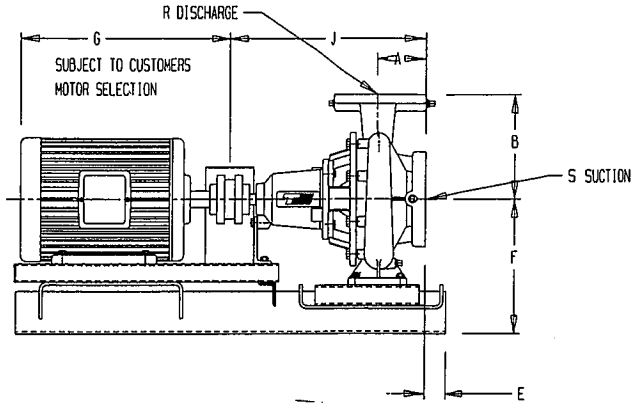


50 Cycle Performance Curves attached when applicable.

| Model No. | HP 1160 RPM | HP 1760 RPM | HP 3500 RPM | Motor Frame | A | B | C | D | E | F | J | K | N | P | R | S |
|---|---|---|---|---|---|---|---|---|---|---|---|---|---|---|---|---|
| 4013 | 5 | | | 215T | 5-5/16 | 12-7/32 | 22 | 53 | 1-1/2 | 13-11/32 | 22-29/32 | 20 | 2 | 49 | 4 | 5 |
| | 7-1/2 | 15 | | 254T | | | | | | | | | | | | |
| | 10 | 20 | | 256T | | | | | | | | | | | | |
| | 15 | 25 | | 284T | | | | | | | | | | | | |
| | | 30 | | 286T | | | | | | | | | | | | |
| | | 40 | | 324T | | | | | | | | | | | | |
| | | 50 | | 326T | | | | | | | | | | | | |

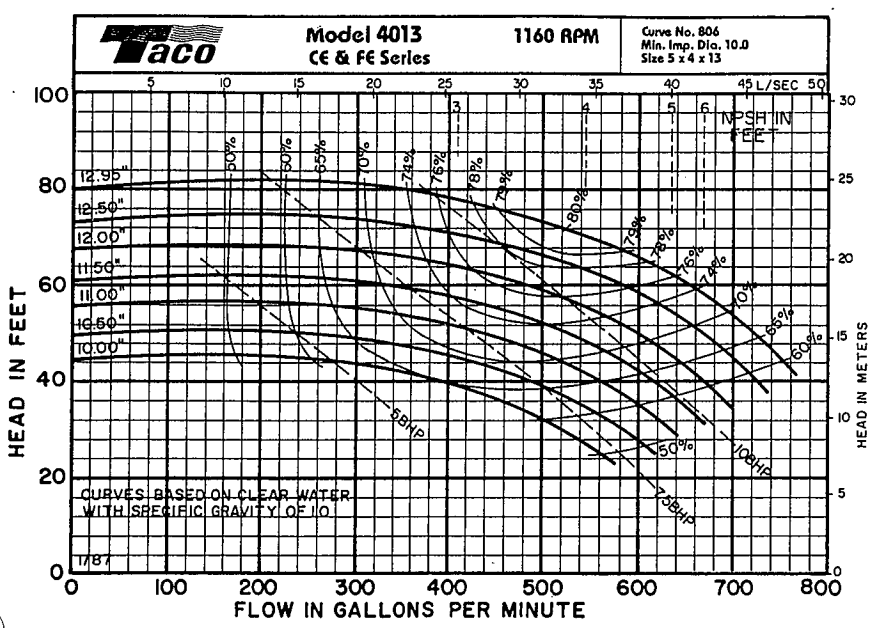


WEIGHT_____PUMP/MOTOR

| Item | BRONZE FITTED | | ALL IRON | |
|---|---|---|---|---|
| | Std. Pump Constr. | Optional | Standard | Optional |
| Casing | Cast Iron ASTM A48 Cl. 35 | | Cast Iron ASTM A48 Cl. 35 | |
| Impeller | Bronze ASTM B30-4A | | Cast Iron ASTM A48 Cl. 35 | |
| Wear Ring | Bronze ASTM B30-4A | | Bronze ASTM B30-4A | |
| Shaft | Carbon Steel AISI 1045 | St. Steel AISI 416 | Carbon Steel AISI 1045 | St. Steel AISI 416 |
| Shaft Sleeve | Bronze SAE 660 | St. Steel AISI 416 | St. Steel AISI 416 | |
| Mech. Seal | Ceramic | Tungsten Carbide | Ceramic | Tungsten Carbide |
| Seal Flush Line | | Copper | | Copper |

| OPERATING SPECIFICATIONS | | |
|---|---|---|
| | Standard | Optional |
| Pressure | 175 PSIG* | |
| Temperature: Mechanical Seal | 250F | 300F |

Motors: All NEMA Standard (T or TS)

* In accordance with ANSI Standard B16.1 Class 125

| ADDITIONAL OPTIONS | |
|---|---|
| Filters | Cuno 5 Micron |
| Separators | Kynar Cyclone Separator |
| Couplings | Spacer Type |

COMMENTS: _____


**TACO, INC.**, 1160 Cranston Street, Cranston, RI 02920 (401) 942-8000 FAX: (401) 942-2360.
**TACO (Canada), Ltd.**, 1310 Aimco Blvd., Mississauga, Ontario L4W1B2. Telephone: 416/625-2160. FAX: 416/625-8616.



Printed in USA
Copyright 1993
TACO, INC.

# Submittal Data Information
## FE Series Pumps

301-807

EFFECTIVE: MAY 1, 1993 SUPERSEDES: NEW **1160 RPM** MODEL 5010

JOB _____

ENGINEER _____

CONTRACTOR _____ REP. _____

| ITEM NO. | MODEL NO. | IMPELLER DIA. | G.P.M. | HEAD/FT. | H.P. | ELEC. CHARS. |
|---|---|---|---|---|---|---|
| | | | | | | |

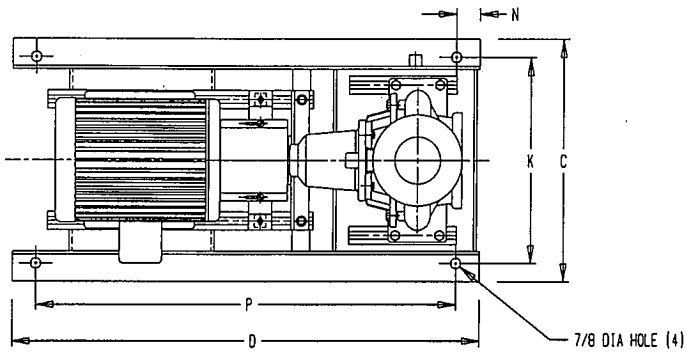


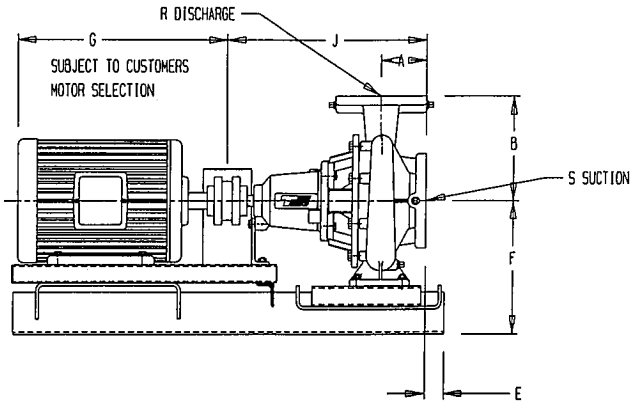


50 Cycle Performance Curves attached when applicable.

| Model No. | HP 1160 RPM | HP 1760 RPM | HP 3500 RPM | Motor Frame | A | B | C | D | E | F | J | K | N | P | R | S |
|---|---|---|---|---|---|---|---|---|---|---|---|---|---|---|---|---|
| 5010 | 5 | | | 215T | 5-5/16 | 13-25/32 | 22 | 53 | 1-1/2 | 13-11/32 | 23-1/16 | 20 | 2 | 49 | 5 | 6 |
| | 7-1/2 | 15 | | 254T | | | | | | | | | | | | |
| | 10 | 20 | | 256T | | | | | | | | | | | | |
| | 15 | 25 | | 284T | | | | | | | | | | | | |
| | | 30 | | 286T | | | | | | | | | | | | |
| | | 40 | | 324T | | | | | | | | | | | | |
| | | 50 | | 326T | | | | | | | | | | | | |

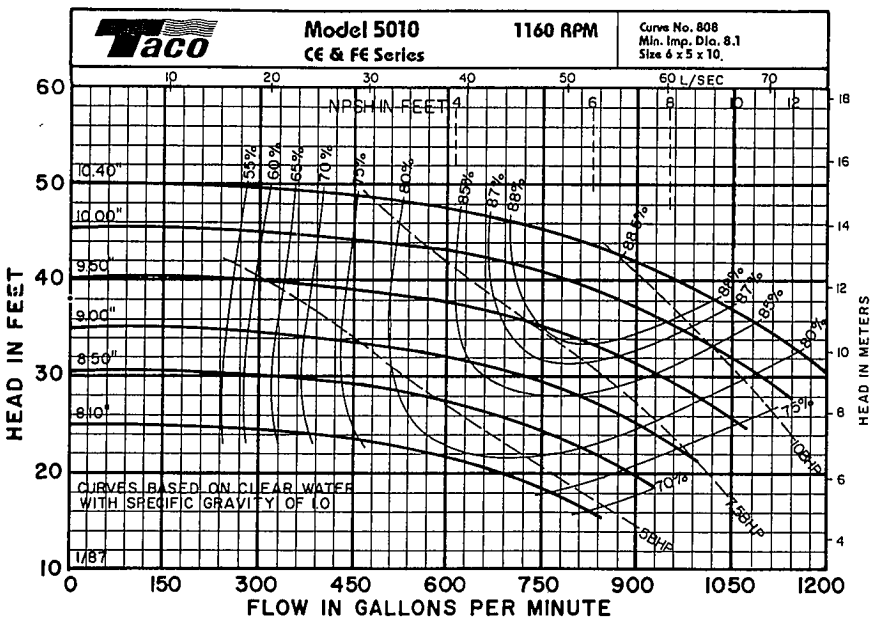


| Item | BRONZE FITTED | | ALL IRON | |
|---|---|---|---|---|
| | Std. Pump Constr. | Optional | Standard | Optional |
| Casing | Cast Iron ASTM A48 Cl. 35 | | Cast Iron ASTM A48 Cl. 35 | |
| Impeller | Bronze ASTM B30-4A | | Cast Iron ASTM A48 Cl. 35 | |
| Wear Ring | Bronze ASTM B30-4A | | Bronze ASTM B30-4A | |
| Shaft | Carbon Steel AISI 1045 | St. Steel AISI 416 | Carbon Steel AISI 1045 | St. Steel AISI 416 |
| Shaft Sleeve | Bronze SAE 660 | St. Steel AISI 416 | St. Steel AISI 416 | |
| Mech. Seal | Ceramic | Tungsten Carbide | Ceramic | Tungsten Carbide |
| Seal Flush Line | | Copper | | Copper |

| OPERATING SPECIFICATIONS | | |
|---|---|---|
| | Standard | Optional |
| Pressure | 175 PSIG* | |
| Temperature: Mechanical Seal | 250F | 300F |

Motors: All NEMA Standard (T or TS)
* In accordance with ANSI Standard B16.1 Class 125

| ADDITIONAL OPTIONS | |
|---|---|
| Filters | Cuno 5 Micron |
| Separators | Kynar Cyclone Separator |
| Couplings | Spacer Type |

WEIGHT_____PUMP/MOTOR

COMMENTS:_____

**TACO, INC.,** 1160 Cranston Street, Cranston, RI 02920 (401) 942-8000 FAX: (401) 942-2360.
**TACO (Canada), Ltd.,** 1310 Almco Blvd., Mississauga, Ontario L4W1B2. Telephone: 416/625-2160. FAX: 416/625-8616.

Printed in USA
Copyright 1993
TACO, INC.

# Submittal Data Information
## FE Series Pumps

301-808

EFFECTIVE: MAY 1, 1993 SUPERSEDES: NEW **1160 RPM** MODEL 5013

JOB _____

ENGINEER _____

CONTRACTOR _____ REP. _____

| ITEM NO. | MODEL NO. | IMPELLER DIA. | G.P.M. | HEAD/FT. | H.P. | ELEC. CHARS. |
|---|---|---|---|---|---|---|
| | | | | | | |

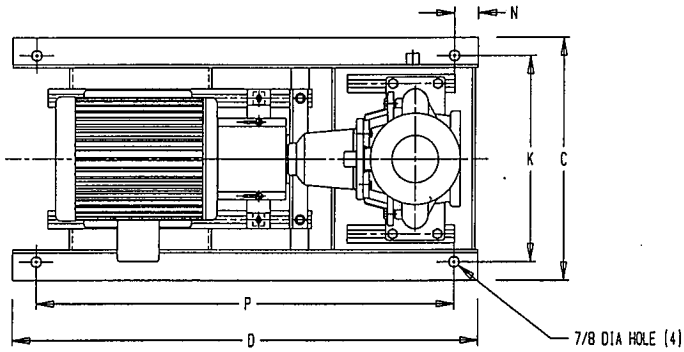


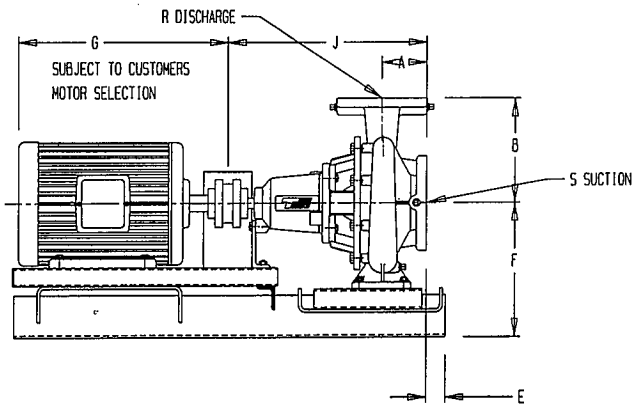


50 Cycle Performance Curves attached when applicable.

| Model No. | HP 1160 RPM | HP 1760 RPM | HP 3500 RPM | Motor Frame | A | B | C | D | E | F | J | K | N | P | R | S |
|---|---|---|---|---|---|---|---|---|---|---|---|---|---|---|---|---|
| 5013 | 5 | | | 215T | 5-5/16 | 13-25/32 | 28 | 50 | 1-7/8 | 14-17/32 | 22-29/32 | 25 | 2 | 46 | 5 | 6 |
| | 7-1/2 | | | 254T | | | | | | | | | | | | |
| | 10 | | | 256T | | | | | | | | | | | | |
| | 15 | 25 | | 284T | | | | | | | | | | | | |
| | 20 | 30 | | 286T | | | | | | | | | | | | |
| | | 40 | | 324T | | | | 55 | | | | | | 51 | | |
| | | 50 | | 326T | | | | | | | | | | | | |
| | | 60 | | 364T | | | | | | | | | | | | |
| | | 75 | | 365T | | | | | | | | | | | | |

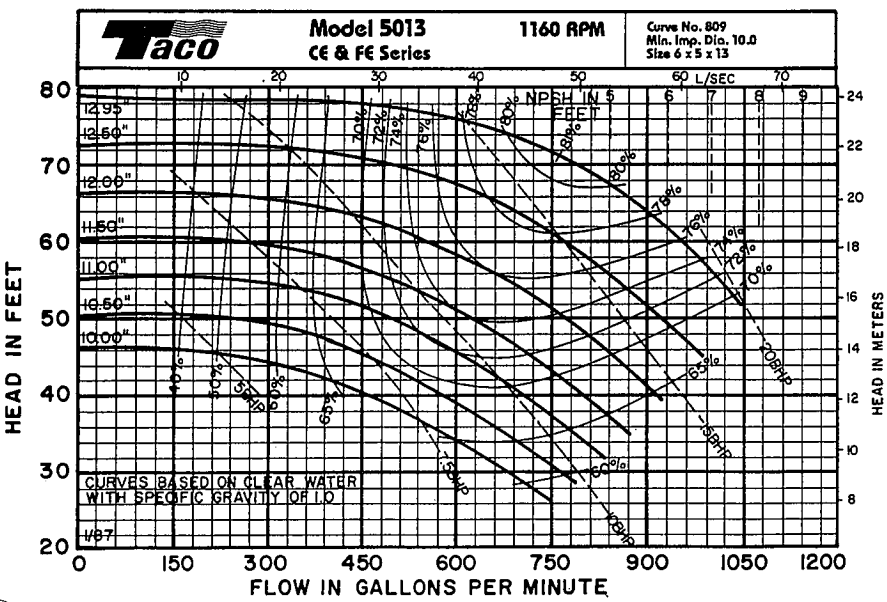


| Item | BRONZE FITTED | | ALL IRON | |
|---|---|---|---|---|
| | Std. Pump Constr. | Optional | Standard | Optional |
| Casing | Cast Iron ASTM A48 Cl. 35 | | Cast Iron ASTM A48 Cl. 35 | |
| Impeller | Bronze ASTM B30-4A | | Cast Iron ASTM A48 Cl. 35 | |
| Wear Ring | Bronze ASTM B30-4A | | Bronze ASTM B30-4A | |
| Shaft | Carbon Steel AISI 1045 | St. Steel AISI 416 | Carbon Steel AISI 1045 | St. Steel AISI 416 |
| Shaft Sleeve | Bronze SAE 660 | St. Steel AISI 416 | St. Steel AISI 416 | |
| Mech. Seal | Ceramic | Tungsten Carbide | Ceramic | Tungsten Carbide |
| Seal Flush Line | | Copper | | Copper |

| OPERATING SPECIFICATIONS | | |
|---|---|---|
| | Standard | Optional |
| Pressure | 175 PSIG* | |
| Temperature: Mechanical Seal | 250F | 300F |

Motors: All NEMA Standard (T or TS)

* In accordance with ANSI Standard B16.1 Class 125

| ADDITIONAL OPTIONS | |
|---|---|
| Filters | Cuno 5 Micron |
| Separators | Kynar Cyclone Separator |
| Couplings | Spacer Type |

WEIGHT_____ PUMP/MOTOR

COMMENTS: _____

**TACO, INC.,** 1160 Cranston Street, Cranston, RI 02920 (401) 942-8000 FAX: (401) 942-2360.
**TACO (Canada), Ltd.,** 1310 Aimco Blvd., Mississauga, Ontario L4W1B2. Telephone: 416/625-2160. FAX: 416/625-8616.

Printed in USA
Copyright 1993
TACO, INC.

# Submittal Data Information
## FE Series Pumps

301-809

EFFECTIVE: MAY 1, 1993 SUPERSEDES: NEW **1160 RPM** MODEL 6013

JOB _____

ENGINEER _____

CONTRACTOR _____ REP. _____

| ITEM NO. | MODEL NO. | IMPELLER DIA. | G.P.M. | HEAD/FT. | H.P. | ELEC. CHARS. |
|---|---|---|---|---|---|---|
| | | | | | | |

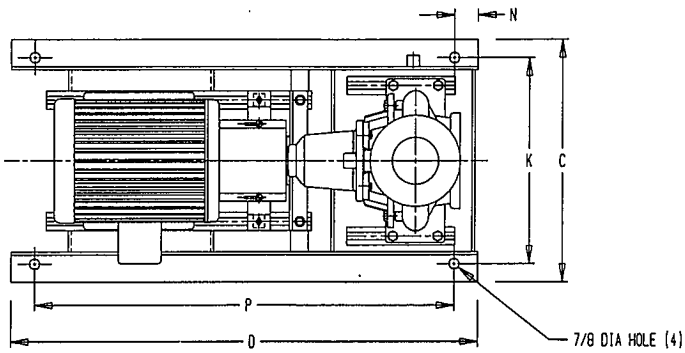


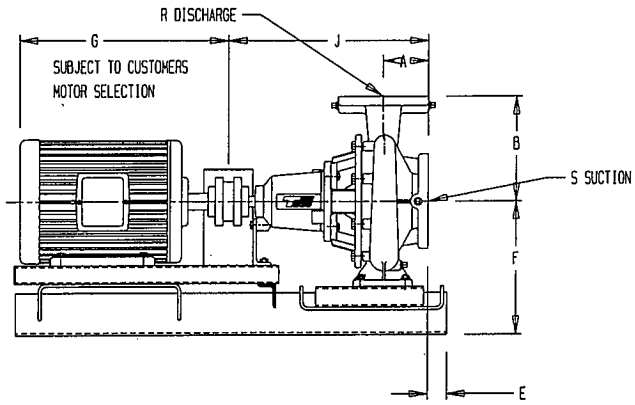


50 Cycle Performance Curves attached when applicable.

| Model No. | HP 1160 RPM | HP 1760 RPM | HP 3500 RPM | Motor Frame | A | B | C | D | E | F | J | K | N | P | R | S |
|---|---|---|---|---|---|---|---|---|---|---|---|---|---|---|---|---|
| 6013 | 10 | | | 256T | 6-1/8 | 15-9/16 | 28 | 50 | 1-7/8 | 14-17/32 | 23-11/16 | 25 | 2 | 46 | 6 | 8 |
| | 15 | | | 284T | | | | | | | | | | | | |
| | 20 | 30 | | 286T | | | | | | | | | | | | |
| | 25 | 40 | | 324T | | | | 58 | | | | | | 54 | | |
| | 30 | 50 | | 326T | | | | | | | | | | | | |
| | 40 | 60 | | 364T | | | | | | | | | | | | |
| | | 75 | | 365T | | | | | | | | | | | | |
| | | 100 | | 404T | | | | | | | | | | | | |
| | | 125 | | 405T | | | | | | | | | | | | |

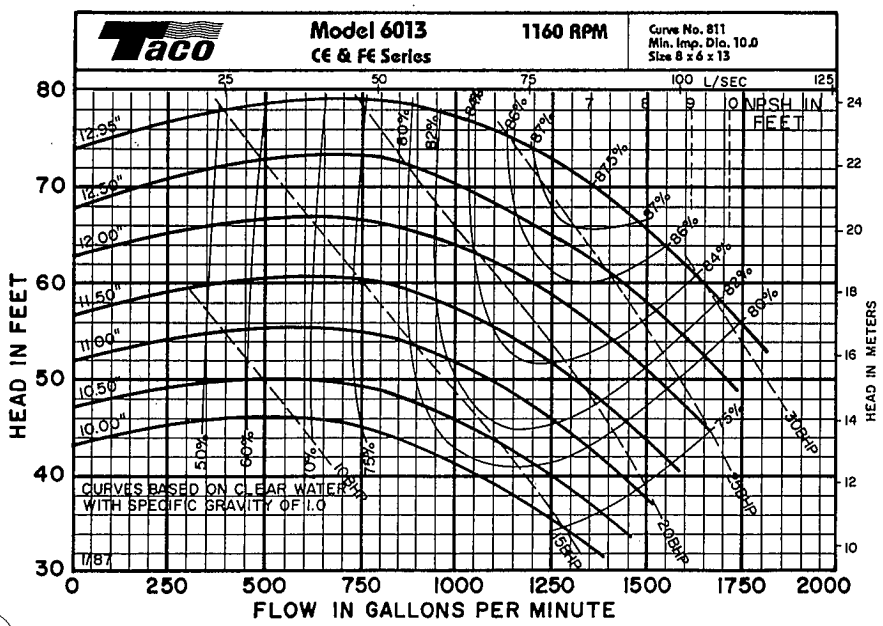


WEIGHT_____ PUMP/MOTOR

| Item | BRONZE FITTED | | ALL IRON | |
|---|---|---|---|---|
| | Std. Pump Constr. | Optional | Standard | Optional |
| Casing | Cast Iron ASTM A48 Cl. 35 | | Cast Iron ASTM A48 Cl. 35 | |
| Impeller | Bronze ASTM B30-4A | | Cast Iron ASTM A48 Cl. 35 | |
| Wear Ring | Bronze ASTM B30-4A | | Bronze ASTM B30-4A | |
| Shaft | Carbon Steel AISI 1045 | St. Steel AISI 416 | Carbon Steel AISI 1045 | St. Steel AISI 416 |
| Shaft Sleeve | Bronze SAE 660 | St. Steel AISI 416 | St. Steel AISI 416 | |
| Mech. Seal | Ceramic | Tungsten Carbide | Ceramic | Tungsten Carbide |
| Seal Flush Line | | Copper | | Copper |

| OPERATING SPECIFICATIONS | | |
|---|---|---|
| | Standard | Optional |
| Pressure | 175 PSIG* | |
| Temperature: Mechanical Seal | 250F | 300F |

Motors: All NEMA Standard (T or TS)

* In accordance with ANSI Standard B16.1 Class 125

| ADDITIONAL OPTIONS | |
|---|---|
| Filters | Cuno 5 Micron |
| Separators | Kynar Cyclone Separator |
| Couplings | Spacer Type |

COMMENTS: _____


**TACO, INC.,** 1160 Cranston Street, Cranston, RI 02920 (401) 942-8000 FAX: (401) 942-2360.
**TACO (Canada), Ltd.,** 1310 Almco Blvd., Mississauga, Ontario L4W1B2. Telephone: 416/625-2160. FAX: 416/625-8616.



Printed in USA
Copyright 1993
TACO, INC.